TVP-CMB-01

TruVision corner mount with connection box for P and M Series IP PTZ cameras

General

The TruVision TVP-CMB-01 corner mount bracket can be used to install M and P Series IP PTZ cameras on the outside corner of a wall. The integrated junction box allows for easy cable management.



Details

- Corner mount bracket with integrated junction box
- Junction box with bottom and back outlet
- Aluminium alloy and steel with surface spray treatment

TVP-CMB-01

TruVision corner mount with connection box for P and M Series IP PTZ cameras

Technical specifications

General

Bracket type	Câmara
Support type	PTZ Kamera
Bracket mounting part	Mounting bracket
Mount type	Hjørne beslag
Cable management	Yes
Maximum load capacity	10 kg (22 lb.) - The wall must be capable of supporting at least 3 times as much as the total weight of the PTZ camera and the mount.

Physical

Physical dimensions	465 x 206.8 x 261.8 mm 18.31 x 8.14 x 10.31 in.
Net weight	4.3 kg 9.48 lb.
Colour	Cinzento (Pantone 428c)
Material	Liga de alumínio e aço, Stål

Environmental

Environment	Indendør, Udendørs

Compatible cameras

P Series IP PTZ cameras	TVGP-P0x-xxxx-PTZ-G
M Series IP PTZ cameras	TVGP-M0x-xxxx-PTZ-G, except TVGP-M01-0201-PTZ-G

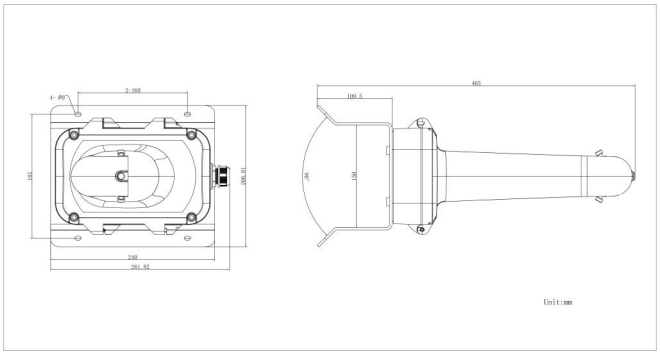

As a company of innovation, Kidde Global Solutions reserves the right to change product specifications without notice. For the latest product specifications, visit firesecurityproducts.com online or contact your sales representative.

Last updated on 24 August 2026 - 15:23