TVD-6113

Caméra dôme analogique TruVision HD-TVI, éclairage hybride intelligent, 2MP, objectif varifocal 2,8-12 mm, IR et lumière blanche 60 m, 12 V DC, IP67, IK10.

High-definition video over coax infrastructure

These advanced 2MP HD-TVI cameras deliver crisp, high-resolution video with 2MP (1920×1080) imaging, making them ideal for a wide range of surveillance applications. Designed to work seamlessly over legacy coaxial cabling, they offer a cost-effective upgrade path without the need for extensive infrastructure changes. Fully compatible with TruVision Hybrid DVRs and encoders, they integrate easily into both new and existing surveillance systems.

Superior imaging in all lighting conditions

Equipped with a large aperture, the cameras provide 24/7 full-color imaging, capturing vivid detail even in low-light environments. Smart-hybrid light technology enhances night surveillance with flexible lighting options—white or IR—that can be activated based on detected motion. With 130 dB true Wide Dynamic Range (WDR) and 3D Digital Noise Reduction (DNR), the cameras maintain clarity and contrast in challenging lighting, including strong backlight or low-light scenes.

Versatile design with built-in audio and rugged protection

The TVx-611x 2MP HD-TVI range includes both fixed lens models (2.8 mm and 3.6 mm) and motorized varifocal lens models (2.8 mm to 12 mm), available in dome and bullet form factors to suit various installation needs. The dome models feature the most powerful illumination with up to 60 meters of both white light and IR distance, ensuring excellent visibility in darkness. Built-in microphones enable high-quality audio over coax, and robust IP67 water/dust resistance combined with IK10 vandal protection ensures durability in demanding indoor or outdoor environments.



Détails

- Résolution 2 MP
- Images en couleur la nuit, avec une lumière ambiante minimale ou grâce à l'éclairage blanc intégré.
- Portée d'illumination infrarouge et lumière blanche jusqu'à 60 m.
- Technologie HD-TVI pour la transmission de vidéo HD via un câble coaxial existant.
- Fonctionnalité jour/nuit réelle combinée à l'IR intelligent et à la lumière blanche pour capturer des images de qualité dans diverses conditions d'éclairage.
- Indice de protection environnementale IP67
- Véritable large plage dynamique (WDR)
- Fonctionnalité OSD via le contrôle TruVision sur câble coaxial.

TVD-6113

Caméra dôme analogique TruVision HD-TVI, éclairage hybride intelligent, 2MP, objectif varifocal 2,8-12 mm, IR et lumière blanche 60 m, 12 V DC, IP67, IK10.

Spécifications techniques

General

Technology	HD-TVI analog
Video standard	NTSC, PAL
Privacy masking	4 programmable privacy masks
Video output	HD-TVI

Camera

Max. resolution	2 MPX
Sensor scan	Progressiv
Sensor type	CMOS
Effective pixels (H x V)	1920 x 1080
Shutter time	PAL: 1/25 s to 1/50,000; NTSC: PAL: 1/30 s to 1/50,000

Lighting performance

WDR type	Echt-WDR
WDR	130 dB
White light	Yes
White light range	Up to 60 m
Digital noise reduction	3D DNR
Day/night	Dzień/Noc z filtrem
Motorized IR cut filter	Yes
Color sensitivity	0.0005 Lux @ (F1.28, AGC ON), 0 Lux with white light
Infrared (IR)	Yes
IR range	Up to 60 m

Lens

Lens type	Zmienna zmotoryzowana
Focal length	2.8 to 12 mm, Horizontal FoV: 106 to 32°, vertical FoV: 56 to 18°, diagonal FoV: 127 to 37°
f-stop	F1.28
Auto focus	Yes
Motorized zoom	Yes

Audio

Audio in	Built-in mic.

Electrical

Operating voltage	12 VDC
Power consumption	7.4 W max.

Physical

Physical dimensions	Ø 121 x 97 mm Ø 4.78 x 3.84 in.
Net weight	Approx. 570 g Approx. 1.26 lb.
Colour	Szary (Pantone 428c)
Material	Aluminium
Form Factor	Dome

Environmental

Vandal proof	Yes
Impact rating	IK10
Environment	Drinnen, Draussen
Operating temperature	-40 to +60°C -40 to 140 °F
Relative humidity	<90%, noncondensing
IP rating	IP67

Regulatory

Compliancy	CE, REACH, RoHS, WEEE

Compatible TruVision Recorders/Encoders

TVR17	
TVR12HD	(Record max. 12 fps)
TVR46HD	
TVR45HD	
TVR15HD	
TVE-120/420/820/1620	

Produits compatibles

Catégorie	Référence	Description
Brackets & Mounts	TVD-CBW	Fixation murale TruVision compatible avec les coupoles TVD-CB2, TVD-CB3, TVD-CB5A, TVD-CB6, TVD-CB7.
Brackets & Mounts	TVD-PPB	Support plafond pendant pour dômes robustes TruVision™ TVD-61XX et ultraView™.
Brackets & Mounts	TVW-BB1	Boîtier de jonction TruVision pour caméras Wedge de la série S6.

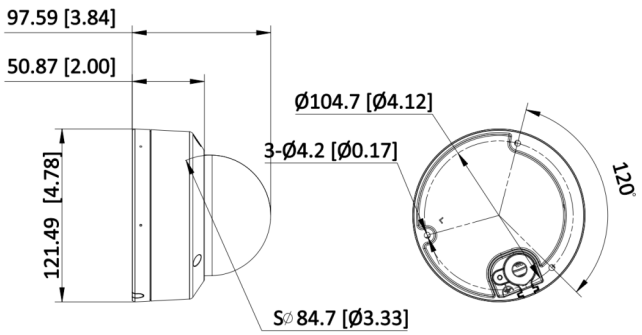

En tant que société d'innovation, Kidde Global Solutions se réserve le droit de modifier les spécifications des produits sans préavis. Pour les dernières spécifications du produit, visitez le site web fr.firesecurityproducts.com ou contactez votre représentant commercial.

Last updated on 12 November 2026 - 18:57