S25-1MLC-B-2

SFP-Port 100BASE-FX Fiber GBIC, 2 km, Multi Mode

Overview

The KGS Fire & Security transceiver module is specifically designed to accommodate high-performance optical fiber, including integrated duplex data link over single mode. Compliant with the SFP Multisource Agreement (MSA), these transceiver modules feature hot-plug capability for easy installation without interrupting host equipment operating online. The SFP transceiver can install into KGS Fire & Security switch products with an 100Base-FX interface.



Details

- SFP multi-source agreement compliant
- Max data rate 155 Mbits/s
- Class 1 laser safety standard IEC 60825 compliant
- 1 fiber multimode
- LC connector
- Low power dissipation
- Plug-and-play capability for easy installation
- Hot Pluggable
- -40°C to +75°C operation temperature
- TTL signal detect indicator
- Single power supply 3.3V
- Comply with the IEEE 802.3ab

S25-1MLC-B-2

SFP-Port 100BASE-FX Fiber GBIC, 2 km, Multi Mode

Technical specifications

General

Category	SFP
Port type	Multi Tilstand
No. of fibers	1
Port speed	100 Mbps
Wavelength	850 nm
Maximum distance	2 km
Connector	LC
PHY type	IEEE 802.3u 100BASE-FX
Reliability (MTBF)	>50,000 h @ 25°C

Electrical

Operating voltage	3.3 VDC
AS/NZS CISPR 22	2006

Physical

Physical dimensions	59 x 15 x 12.4 mm (2.20 x 0.59 x 0.49 in.) (W x D x H)
Net weight	18 g (0.6 oz)

Environmental

Operating temperature	-40 to +75°C
Storage temperature	-40 to +80°C
Relative humidity	5 to 95% noncondensing

Regulatory

Compliancy	CE, REACH, RoHS 2
	IEEE 802.3ab Fast Ethernet Standard
	Class 1 laser product complies with EN 60825-1

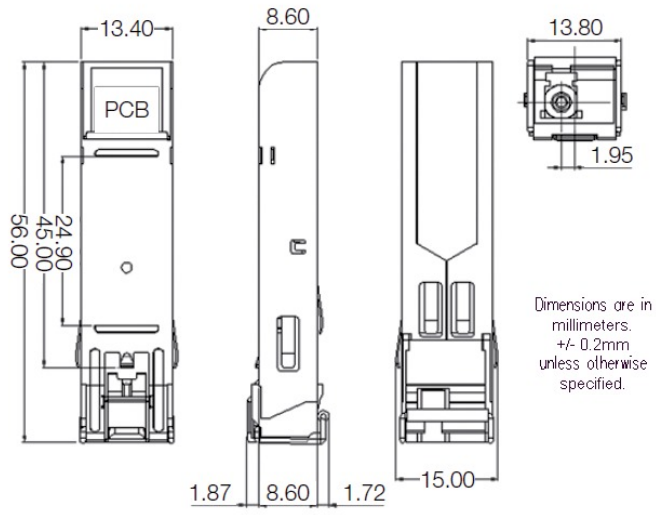

As a company of innovation, Kidde Global Solutions reserves the right to change product specifications without notice. For the latest product specifications, visit firesecurityproducts.com online or contact your sales representative.

Last updated on 16 June 2026 - 15:24