TVP-PMB-03

TruVision PTZ Pendant Mount bracket

General

The TruVision TVP-PMB-03 pendant mount bracket can be used to install IP PTZ cameras on a ceiling.



Dettagli

- Pendant mount bracket to be mounted on horizontal ceiling
- Compatible with selected PTZ cameras

TVP-PMB-03

TruVision PTZ Pendant Mount bracket

Specifiche tecniche

General

Bracket type	Caméra
Support type	PTZ Kamera
Bracket mounting part	Mounting bracket
Mount type	Vedhæng montering
Cable management	Yes

Physical

Physical dimensions	117 x 117 x 105 mm
Net weight	750 g
Colour	Grå
Material	Alliage d’aluminium et acier

Environmental

Environment	Indendør, Udendørs

Prodotti compatibili

Categoria	Riferimento	Descrizione
Camera	TVGP-P02-0401-PTZ-G	TruVision 4MP IP PTZ camera, H.265+, 300m IR, 25x zoom, Super Low Light, IP67, IK10, NEMA 4X, Hi-PoE/36VDC
Camera	TVGP-P02-0402-PTZ-G	TruVision 4MP IP PTZ camera, H.265+, 400m IR, 42x zoom, Super Low Light, IP67, IK10, NEMA 4X, Hi-PoE/36VDC

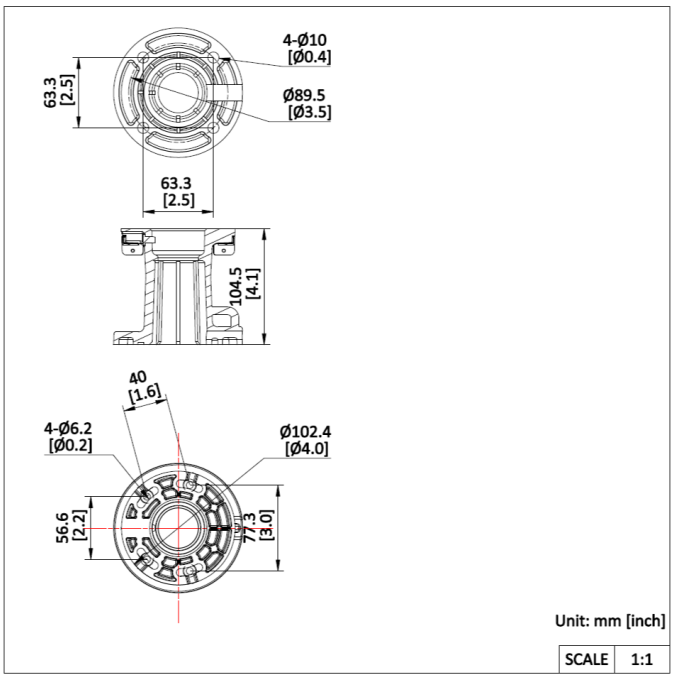

In quanto azienda in continua innovazione, Kidde Global Solutions si riserva il diritto di modificare le specifiche del prodotto senza preavviso. Per avere informazioni sempre aggiornate, visita it.firesecurityproducts.com online o contatta il tuo riferimento commerciale.

Last updated on 12 November 2026 - 18:57