TVGP-P01-0401-DOM-G

Caméra dôme IP TruVision™ 4MP, pour conditions de luminosité extrêmement faibles, objectif 2,8-12 mm, grise.

Overview

The TruVision P Series IP dome cameras have a rich set of features which make them ideal for demanding security, surveillance, and monitoring applications such as commercial, retail and large projects. Available in 4 and 8MP 4K resolutions delivering high-quality images thanks to their extreme low light sensitivity which brings clear visibility even in the dark.

The cameras support up to 4 configurable video streams which allows users to optimize the cameras remote live view capabilities while controlling the bandwidth usage. The motorized varifocal lens with auto-iris technology allows users to remotely adjust the zoom level and focus to get crisp images anytime anywhere. In addition to the compatibility with other TruVision products and 3rd party VMS software, the cameras also support NAS recording or local MicroSD card recording to protect data in the event of network disruptions.

The cameras go above and beyond standard motion detection with enhanced alarm capabilities, including cross line detection, intrusion detection, region entrance, region exit and face capture features. With its smart person/vehicle filter feature the camera can ignore irrelevant motion or VCA events which will automatically lead to less storage consumption and faster retrieval of relevant video events.



Détails

- Résolution maximale : 2688 × 1520
- Compression H.265(+), H.264(+) et MJPEG
- 4 flux vidéo indépendants et configurables
- Zoom motorisé de 2.8 à 12 mm avec mise au point automatique
- Éclairage IR jusqu'à 40 m
- Objectif P-iris
- Profils ONVIF S, G et T
- Intelligence vidéo enrichie (VCA)
- Jusqu'à 140 dB de plage dynamique étendue
- Enregistrement embarqué jusqu'à 256 Go avec une carte SD optionnelle

TVGP-P01-0401-DOM-G

Caméra dôme IP TruVision™ 4MP, pour conditions de luminosité extrêmement faibles, objectif 2,8-12 mm, grise.

Spécifications techniques

General

Technology	IP
Video standard	NTSC, PAL
Image settings	De-Fog, Flur-Ansicht, Spiegel, ROI (Region Of Interest)
Privacy masking	Yes
Software compatibility	Milestone XProtect, OnGuard, TruVision Navigator, TVRmobile, Webbrowser

Camera

Sensor size	1/1.8"
Max. resolution	4 MPX
Sensor scan	Progressiv
Sensor type	CMOS
Shutter time	1/3 s to 1/100,000 s

Lighting performance

WDR type	Echt-WDR
WDR	140 dB
Digital noise reduction	3D DNR
Day/night	Echt Tag / Nacht
Motorized IR cut filter	Yes
Color sensitivity	Color: 0.0014 Lux @ (F1.4, AGC ON),B/W: 0 Lux with IR
Infrared (IR)	Yes
IR range	Up to 40 m
IR wavelength	850 nm

Encoding

Video streams	4
Main stream compression	H.264, H.264+, H.265, H.265+
Sub stream compression	H.264, H.265, MJPEG
Third stream compression	H.264, H.265
Video bit rate	32 to 8 Mbps
Main stream resolutions	1280 x 720 (XVGA), 1920 x 1080 (1080p), 2688 x 1520
Sub stream resolutions	1280 x 720 (XVGA), 640 x 360 (nHD), 640 x 480 (VGA)
Third stream resolutions	1280 x 720 (XVGA), 1920 x 1080 (1080p), 640 x 360 (nHD), 640 x 480 (VGA)
4th stream compression	H.265, H.264, MJPEG
4th stream resolutions	1280 x 720 (XVGA), 640 x 480 (VGA), 640 x 360 (nHD)
Max. resolution @ fps	2688 × 1520 @ 25/30 fps

Lens

Lens type	Varifokal motorisiert
Focal length	2.8 to 12 mm: horizontal FoV 114 to 41.8°, vertical FoV 59.3 to 23.6°, diagonal FoV 141.3 to 48.1°
P-iris	Yes
Auto focus	Yes
Motorized zoom	Yes

DORI

Detection	60 to 149 m
Observation	23.8 to 59.1 m
Recognition	12 to 29.8 m
Identification	6 to 14.9 m

Network

Network interface	RJ-45 10/100 Mbit / s selbstanpassende Ethernet-Schnittstelle
Integration	CGI, ISAPI, ONVIF Profil G, ONVIF Profil S, ONVIF Profile T
Supported network protocols	802.1x, Bonjour, DDNS, DHCP, DNS, FTP, HTTP, HTTPS, ICMP, IGMP, IPv4, IPv6, NTP, PPPoE, Qos, RTCP, RTP, RTSP, SMTP, SNMP, TCP/IP, UPnP

WiFi

Security	Password protection, HTTPS encryption, 802.1x authentication (EAP-TLS, EAP-LEAP, EAP-MD5), watermark, IP address filter, basic and digest authentication for HTTP/HTTPS, WSSE and digest authentication for ONVIF, RTP/RTSP over HTTPS, control timeout setting

Audio

Audio compression	G.711alaw, G.711ulaw, G.722.1, G.726, MP2L2, MP3, PCM
Audio in	1 input (line in), terminal block, max. input amplitude: 3.3 Vpp, input impedance: 4.7 KΩ,
Audio out	1 output (line out), terminal block, max. output amplitude: 3.3 Vpp, output impedance: 100 Ω

Alarm I/O

Alarm inputs	2
Alarm outputs	2 outputs (24 VAC/VDC, 1A max)

Storage

Local storage support	Yes
Local storage type	Built-in Micro SD/SDHC/SDXC card slot
Max. SD card capacity	256 GB

Video intelligence

Alarm trigger	HDD error, HDD full, Invalid login, IP address conflict, Network disconnected, Video tampering
ROI	5 fixed regions for main stream and sub-stream
Smart event	Erweiterte Bewegungserkennung, Audio exception detection, De-Fokus, Face capture, Einbruchmeldetechnikserkennung, Line crossing detection, Object removal detection, People counting, People management, Erkennung eines Bereichseintritts, Region exiting detection, Bildwechsel, Unattended baggage detection

Electrical

Operating voltage	12 VDC ± 25%, 0.9 A, 24 VAC ± 20%, 0.75 A, two-core terminal block, PoE: 802.3af, Class 3, 36 V to 57 V, 0.36 A to 0.23 A
Power consumption	12 VDC, 0.9 A, max. 10.8 W, 24 VAC, 0.75 A, max. 10.8 W, PoE: 802.3at, max. 12.9 W

TVGP-P01-0401-DOM-G

Caméra dôme IP TruVision™ 4MP, pour conditions de luminosité extrêmement faibles, objectif 2,8-12 mm, grise.

Physical

Physical dimensions	Ø162 × 141.8 mm Ø6.4 × 5.6 in.
Net weight	1420 g 3.1 lb.
Shipping weight	2058 g 4.5 lb.
Colour	Grau
Form Factor	Dome

Environmental

Vandal proof	Yes
Impact rating	IK10
Environment	Draussen
Operating temperature	-40 to +60°C -40 to +140°F
Relative humidity	<95% noncondensing
IP rating	IP67

Regulatory

Compliancy	CE, FCC, REACH, RoHS, UL, WEEE

Produits compatibles

Catégorie	Référence	Description
Brackets & Mounts	TVD-CB9	Coupole de fixation TruVision pour la caméra dôme extérieure S7
Brackets & Mounts	TVD-CBW	Fixation murale TruVision compatible avec les coupoles TVD-CB2, TVD-CB3, TVD-CB5A, TVD-CB6, TVD-CB7.
Brackets & Mounts	TVD-M-PMA-SS	Adaptateur de montage sur poteau TruVision pour utilisation avec TVD-SNB (acier inoxydable).
Brackets & Mounts	TVD-PPB	Support plafond pendant pour dômes robustes TruVision™ TVD-61XX et ultraView™.
Brackets & Mounts	TVD-SNB-BB	Boîtier de raccordement TruVision pour support pour TVD-SNB, TVD-M2-WM.

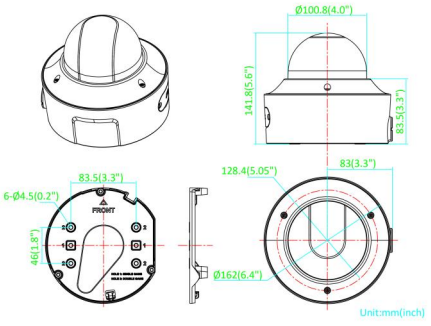

En tant que société d'innovation, Kidde Global Solutions se réserve le droit de modifier les spécifications des produits sans préavis. Pour les dernières spécifications du produit, visitez le site web fr.firesecurityproducts.com ou contactez votre représentant commercial.

Last updated on 12 November 2026 - 18:57