TVGP-P01-0802-DOM-G

TruVision™ 8MP, Super lichtempfindlich, IP-Dome-Kamera, 8-32 mm Objektiv, grau

Overview

The TruVision P Series IP dome cameras have a rich set of features which make them ideal for demanding security, surveillance, and monitoring applications such as commercial, retail and large projects. Available in 4 and 8MP 4K resolutions delivering high-quality images thanks to their extreme low light sensitivity which brings clear visibility even in the dark.

The cameras support up to 4 configurable video streams which allows users to optimize the cameras remote live view capabilities while controlling the bandwidth usage. The motorized varifocal lens with auto-iris technology allows users to remotely adjust the zoom level and focus to get crisp images anytime anywhere. In addition to the compatibility with other TruVision products and 3rd party VMS software, the cameras also support NAS recording or local MicroSD card recording to protect data in the event of network disruptions.

The cameras go above and beyond standard motion detection with enhanced alarm capabilities, including cross line detection, intrusion detection, region entrance, region exit and face capture features. With its smart person/vehicle filter feature the camera can ignore irrelevant motion or VCA events which will automatically lead to less storage consumption and faster retrieval of relevant video events.



Einzelheiten

- Maximale Auflösung: 3840 × 2160
- H.265(+), H.264(+) und MJPEG-Kompression
- 4 unabhängige, konfigurierbare Videostreams
- Motorisiertes Zoomobjektiv 8 bis 32 mm mit Autofokus
- IR-Beleuchtung bis zu 50 m
- P-Blende
- ONVIF-Profile S, G und T
- Umfangreiche Video-Intelligenz (VCA)
- Bis zu 120 dB großer Dynamikbereich
- Edge-Aufnahme bis zu 256 GB mit optionaler SD-Karte

TVGP-P01-0802-DOM-G

TruVision™ 8MP, Super lichtempfindlich, IP-Dome-Kamera, 8-32 mm Objektiv, grau

Technische Spezifikationen

General

Technology	IP
Video standard	NTSC, PAL
Image settings	De-Fog, Vue du couloir, Miroir, Région d'intérêt (ROI)
Privacy masking	Ja
Software compatibility	Milestone XProtect, OnGuard, TruVision Navigator, TVRmobile, Logiciel de navigation

Camera

Sensor size	1 / 1.8 "
Max. resolution	8 MPX
Sensor scan	Progressif
Sensor type	CMOS
Shutter time	1/3 s bis 1/100,000 s

Lighting performance

WDR type	Vrai WDR
WDR	120 dB
Digital noise reduction	3D DNR
Day/night	Vrai jour / nuit
Motorized IR cut filter	Yes
Color sensitivity	Farbe: 0,004 Lux @ (F1.4, AGC ON),S/W: 0 Lux mit IR
Infrared (IR)	Yes
IR range	Bis zu 50 m
IR wavelength	850 nm

Encoding

Video streams	4
Main stream compression	H.264, H.264+, H.265, H.265+
Sub stream compression	H.264, H.265, M-JPEG
Third stream compression	H.264, H.265
Video bit rate	32 bis 16 Mbps
Main stream resolutions	1280 x 720 (XVGA), 1920 x 1080 (1080p), 2688 x 1520, 3200 x 1800, 3840 x 2160
Sub stream resolutions	1280 x 720 (XVGA), 640 x 360 (nHD), 640 x 480 (VGA)
Third stream resolutions	1280 x 720 (XVGA), 1920 x 1080 (1080p), 640 x 360 (nHD), 640 x 480 (VGA)
4th stream compression	H.265, H.264, MJPEG
4th stream resolutions	640 x 360 (nHD), 640 x 480 (VGA), 1280 x 720 (XVGA),
Max. resolution @ fps	3840 × 2160 @ 25/30 fps

Lens

Lens type	Varifocale motorisée
Focal length	8 bis 32 mm: horizontaler Blickwinkel 41,8 bis 15°, vertikaler Blickwinkel 22,9 bis 8,5°, diagonaler Blickwinkel 48,7 bis 17,1°
Auto focus	Yes
Motorized zoom	Yes
Auto-iris	P-iris

DORI

Detection	218 to 580 m
Observation	86.5 to 230.2 m
Recognition	43.6 to116 m
Identification	21.8 to 58 m

Network

Network interface	RJ-45 10/100 Mbit/s auto-adaptable interface Ethernet
Integration	CGI, ISAPI, ONVIF profil G, ONVIF profil S, ONVIF Profile T
Supported network protocols	802.1x, Bonjour, DDNS, DHCP, DNS, FTP, HTTP, HTTPS, ICMP, IGMP, IPv4, IPv6, NTP, PPPoE, Qos, RTCP, RTP, RTSP, SMTP, SNMP, TCP/IP, UPnP

Audio

Audio compression	G.711alaw, G.711ulaw, G.722.1, G.726, MP2L2, MP3, PCM
Audio in	1 Eingang (Line-In), Klemmleiste, max. Eingangsamplitude: 3,3 Vss, Eingangsimpedanz: 4,7 KΩ,
Audio out	1 Ausgang (Line-Out), Klemmenleiste, maximale Ausgangsamplitude: 3,3 Vss, Ausgangsimpedanz: 100 Ω

Alarm I/O

Alarm inputs	2
Alarm outputs	2 Ausgänge (24 VAC/VDC, 1A max)

Storage

Local storage support	Yes
Local storage type	Integrierter Micro SD/SDHC/SDXC-Kartensteckplatz
Max. SD card capacity	256 GB

Video intelligence

Alarm trigger	HDD error, HDD full, Invalid login, IP address conflict, Network disconnected, Sabotage
ROI	5 feste Regionen für Mainstream und Substream
Smart event	Détection de mouvement avancée, Audio exception detection, Mise au point, Face capture, Détection d'intrusion, Détection de passage à niveau, Détection de suppression d'objet, People counting, People management, Détection d'entrée région, Détection de région de sortie, Changement de scène, Unattended baggage detection

Electrical

Operating voltage	12 VDC ± 25%, 0,9 A, 24 VAC ± 20%, 0,75 A, zweiadrige Klemmleiste, PoE: 802.3af, Klasse 3, 36 V bis 57 V, 0,36 A bis 0,23 A
Power consumption	12 VDC, 0,9 A, max. 10,8 W, 24 VAC, 0,75 A, max. 10,8 W, PoE: 802.3at, max. 12.9 W

TVGP-P01-0802-DOM-G

TruVision™ 8MP, Super lichtempfindlich, IP-Dome-Kamera, 8-32 mm Objektiv, grau

Physical

Physical dimensions	Ø162 × 141.8 mm
Net weight	1420 g
Shipping weight	2058 g
Colour	Grau
Form Factor	Dome

Environmental

Vandal proof	Yes
Impact rating	IK10
Environment	Draussen
Operating temperature	-40 bis +60°C
Relative humidity	<95% nicht kondensierend
IP rating	IP67

Regulatory

Compliancy	CE, FCC, REACH, RoHS, UL, WEEE

Kompatible Produkte

Kategorie	Referenz	Beschreibung
Brackets & Mounts	TVD-CB9	TruVision Sockel für Außen-Domekameras Serie 7
Brackets & Mounts	TVD-CBW	TruVision beslag til vægmontering. Kan kombineres med kameramonteringsskåle TVD-CB2, TVD-CB3, TVD-CB5A, TVD-CB6, TVD-CB7
Brackets & Mounts	TVD-M-PMA-SS	TruVision Mastadapter (Edelstahl)
Brackets & Mounts	TVD-PPB	Abgehängte Deckenhalterung
Brackets & Mounts	TVD-SNB-BB	Profilbox für TVD-SNB oder TVD-M2-WM

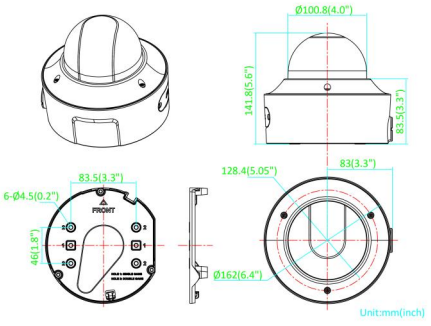

Als innovatives Unternehmen behält sich Kidde Global Solutions das Recht vor, Produktspezifikationen ohne Ankündigungen zu ändern. Für die aktuellsten Produktspezifikationen, besuchen Sie bitte de.firesecurityproducts.com online oder kontaktieren Sie bitte unsere Vertriebsmitarbeiter.

Last updated on 12 November 2026 - 18:57