KE-AS3010W-IP

Excellence Series intelligent addressable weatherproof sounder

General

The AS2364W is a WHITE bodied, deep base addressable room sounder for fire alarm systems running 2000 series addressable fire protocol. Multiple tone selection and full CPD approval ensure conformance to local regulations.

The sounders operate over a 2-wire 2000 series loop and are loop powered i.e. no external power supply is required. They are compatible with automatic phased-start synchronisation controlled from the fire panel. The AS2364W has a IP65 enclosure.

Installation

Device cabling is done to the base and allows the sounder to be fitted and locked into position afterwards. A separate earth terminal is provided in the base for connecting the screen or functional earth when required.

Efficient and versatile

These sounders can be put into different operating modes depending on local requirements. It provides high sound output at a low current, thus reducing power standby requirements and overall system cost. They are supplied with high/low volume settings as standard, allowing final audio adjustments to be made during installation.

The sounder is tone selectable during installation. 32 tone settings are available.

Safety & Security

Automatic daily self testing ensures that when the device is activated, everything works as expected. Pre-activation self testing ensures that a warning is raised before an event takes place, minimising the risk when notification is required.



Details

- Supplied with IP rated, surface mount base accessory ensuring sufficient ingress protection for outdoor applications
- Top, bottom or rear cable entry support for application flexibility
- Standard first fix base shared with point detectors for ease of planning, logistics and installation
- Base lock, address tag and surface cabling support for easy installation in all conditions
- Loop powered with battery assisted activation allowing up to 128 devices per loop
- 32 selectable tones at 4 selectable volume levels that can be configured from the CIE
- Multi-stage evacuation support for application flexibility
- Pre-and post activation self testing ensuring maximum safety
- Automatic synchronisation
- Tri-colour diagnostic LED indicator for fast commissioning and fault finding support

KE-AS3010W-IP

Excellence Series intelligent addressable weatherproof sounder

Technical specifications

General

Compatibility	Kidde Commercial Excellence Systems
Addressing method	DIL switch
Monitoring	Activated, Battery level, Continuously self-checking, Fault

Electrical

Power supply type	Baterías, Alimentado por bucle
Batteries	3 x CR123 (optional)
Operating voltage	17 to 29 VDC
Communication voltage	4 to 11 V pulsed
Current consumption	250 µA (Quiescent) 1.4 mA (Activated - from the loop with batteries installed) Refer to installation sheet for consumption values when only loop powered

Sounder

Output level	55 to 102 dB(A) - Tone dependent
Output level adjustment	4 levels
Frequency	User selectable
Selectable tones	32
Synchronization	Supported
No. of stages	3

Physical

Physical dimensions	110 x 129 mm (Ø x H)
Net weight	465 g
Colour	Blanco (RAL 9016)
Mounting type	Montaje sobre base
Mounting position	Techo, Pared
Mounting base	Profundo
Material	PC / ABS
Texture	Smooth

Environmental

Operating temperature	−25 to +70°C
Storage temperature	−25 to +75°C
Relative humidity	10 to 93% (noncondensing)
Environment	Indendør, Udendørs
IP rating	IP33C

Regulatory

Compliancy	CE, REACH, RoHS 3, WEEE
Certification	CPR
Standards	EN54-3

Compatible products

Category	Reference	Description
Detection device	KE-DB3010W	Excellence series intelligent device accessory - standard base

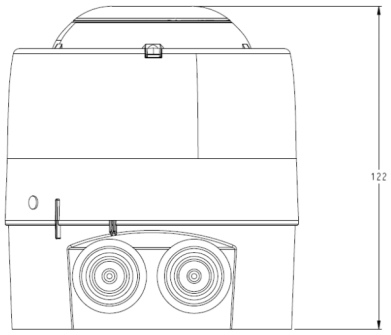

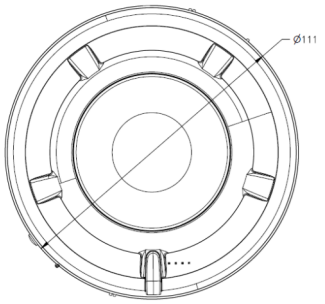

KIDDE COMMERCIAL

As a company of innovation, Kidde Global Solutions reserves the right to change product specifications without notice. For the latest product specifications, visit firesecurityproducts.com online or contact your sales representative.

Last updated on 25 August 2026 - 12:38