NC-BA-SM-W

Conventional base accessory - Surface mount (White)

General

The NC-BA-SM-W is an NC-Series surface mount base accessory. It allows cabling to be installed by running standard electrical conduit directly into the base, leaving no exposed cabling.

Preparation

The standard rear cable entry into the base is available with the same wide opening dimensions to the standard base with ample room for cables. In addition, four entry points are provided on the wall of the fixture to accommodate side entry, spaced at 90° around the base to allow entry and exit in all directions.

Installation

The conduit entry points are conveniently supplied with breakouts. Keyhole screw fixing locations adds to the ease of installation.

The standard NC-Series detector base fits snugly on top of the fixture, completing the installation with the same feature set as for standard surface mount installation for quick, easy and secure detector placement.



Details

- Large rear cable entry with ample space for cables
- Side conduit entry protects cables from damage
- Breakout support for conduit entry
- Installation fixture with first fix screw option reduces installation time and effort
- Allows surface cabling for all NC-Series conventional detector bases

NC-BA-SM-W

Conventional base accessory - Surface mount (White)

Technical specifications

General

Compatibility	NC-Series point detector bases

Physical

Physical dimensions	101 x 25 mm (Ø x D)
Net weight	23.5 g
Colour	Blanco (RAL 9016)
Mounting type	Loftmontering
Cable entries	5
Conduit specification	M16 or M20 (16 or 20 mm (Ø))
Material (body)	ABS-757K-NC

Environmental

Vandal proof	No
Operating temperature	-10ºC to +65ºC
Storage temperature	-30ºC to +75ºC
Relative humidity	10 to 93% noncondensing
Environment	Indendør

Regulatory

Compliancy	CE, REACH, RoHS 2, WEEE
Certification marks	CE, UKCA

Compatible products

Category	Reference	Description
Detection device	NC-DB-B	Conventional standard point detector base (Black)
Detection device	NC-DB-W	Conventional standard point detector base (White)
Detection device	NC-DB2R-W	Conventional dual relay base (White)
Detection device	NC-DBD-W	Conventional standard point detector base with diode (White)
Detection device	NC-DBR-W	Conventional relay base (White)

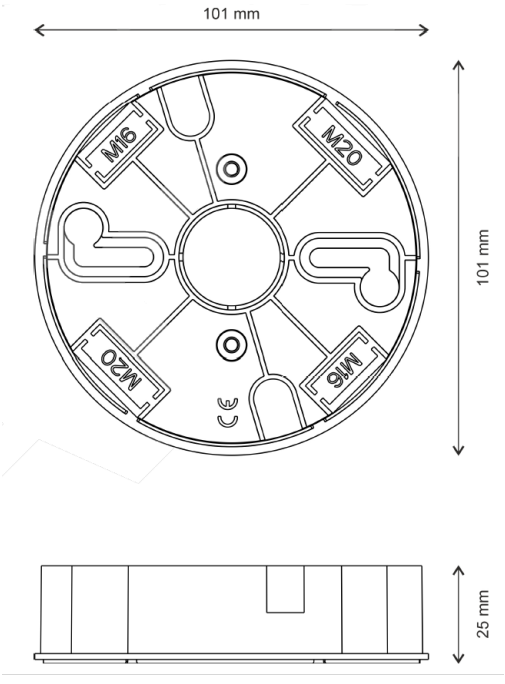

KIDDE COMMERCIAL

As a company of innovation, Kidde Global Solutions reserves the right to change product specifications without notice. For the latest product specifications, visit firesecurityproducts.com online or contact your sales representative.

Last updated on 8 January 2026 - 10:59