TVP-PMB-02

TruVision PTZ Pole Mount bracket

General

The TruVision TVP-PMB-02 pole mount bracket can be used to install PTZ cameras on a pole.



Details

- Pole mount bracket compatible with PTZ wall mount bracket TVP-WMB-01
- Adjustable diameter from 67 to 127 mm

TVP-PMB-02

TruVision PTZ Pole Mount bracket

Technical specifications

General

Bracket type	Kamera
Support type	PTZ-Kamera
Bracket mounting part	Montagehalterung
Mount type	Mastmontage
Cable management	Yes

Physical

Physical dimensions	143 x 128 x 194 mm Diameter mounting rings from 67 to 127 mm
Net weight	1300 g
Colour	Grau
Material	Rostfreier Stahl

Environmental

Environment	Drinnen, Draussen

Compatible products

Category	Reference	Description
Brackets & Mounts	TVP-WMB-01	TruVision PTZ Wall Mount bracket

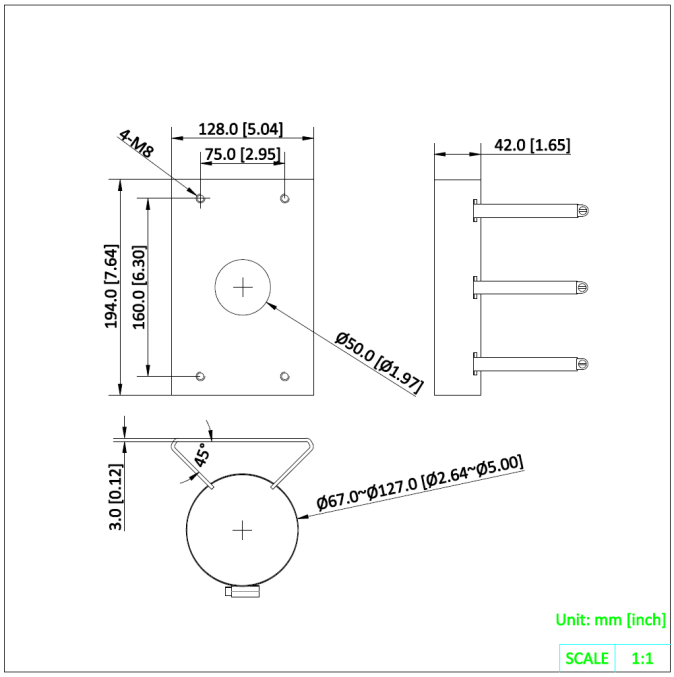

As a company of innovation, Kidde Global Solutions reserves the right to change product specifications without notice. For the latest product specifications, visit firesecurityproducts.com online or contact your sales representative.

Last updated on 24 August 2026 - 15:23