TVD-CBW-CB-B

Staffa per montaggio a parete e base a tazza per telecamere Turret a ottica fissa, nera

Overview

The TVD-CBW-CB-B includes wall mount and cup base compatible with M Series fixed lens Turret IP cameras, black.



Dettagli

- Wall mount bracket with preinstalled cup base, black
- Compatible with M Series fixed lens turret IP cameras, black

TVD-CBW-CB-B

Staffa per montaggio a parete e base a tazza per telecamere Turret a ottica fissa, nera

Specifiche tecniche

General

Bracket type	Camera
Bracket mounting part	Mounting bracket
Mount type	Wall mount

Physical

Physical dimensions	120 x 183.5 x 162 mm 4.72 x 7.22 x 9.0 in.
Net weight	870 g (with cup base attached) 1.92 lb. (with cup base attached)
Colour	Black
Material	Aluminium

Environmental

Environment	Indoor, Outdoor

Prodotti compatibili

Categoria	Riferimento	Descrizione
Camera	TVGP-M01-0201 -TUR-B	Caméra IP tourelle TruVision 2MP, H.265+, IR 30m, objectif 2.8mm, noire, IP67.
Camera	TVGP-M01-0401 -TUR-B	Caméra tourelle noire TruVision 4 Mpx, H.265+, Smart IP, IR 30m, objectif 2.8mm, IP67.

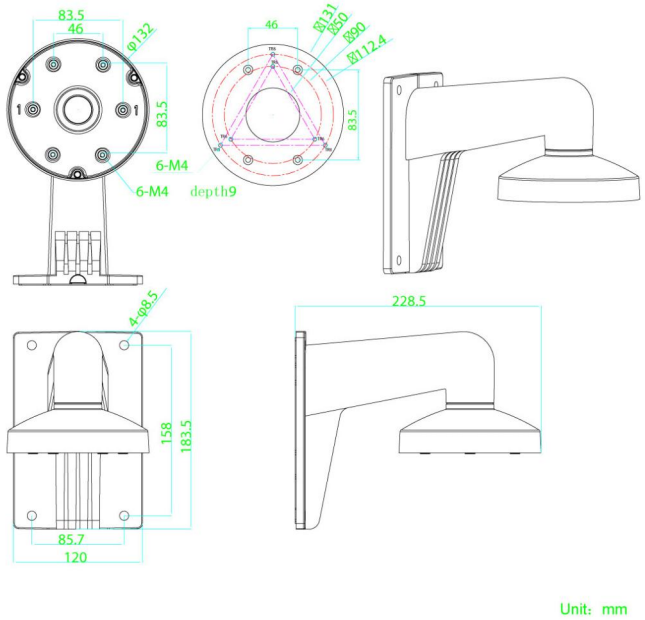

In quanto azienda in continua innovazione, Kidde Global Solutions si riserva il diritto di modificare le specifiche del prodotto senza preavviso. Per avere informazioni sempre aggiornate, visita it.firesecurityproducts.com online o contatta il tuo riferimento commerciale.

Last updated on 12 November 2026 - 18:57