TVD-CBW-CB-B

TruVision wall mount bracket and cup base for fixed lens turret cameras, black

Overview

The TVD-CBW-CB-B includes wall mount and cup base compatible with M Series fixed lens Turret IP cameras, black.



Details

- Wall mount bracket with preinstalled cup base, black
- Compatible with M Series fixed lens turret IP cameras, black

TVD-CBW-CB-B

TruVision wall mount bracket and cup base for fixed lens turret cameras, black

Technical specifications

General

Bracket type	Camera
Bracket mounting part	Mounting bracket
Mount type	Wall mount

Physical

Physical dimensions	120 x 183.5 x 162 mm 4.72 x 7.22 x 9.0 in.
Net weight	870 g (with cup base attached) 1.92 lb. (with cup base attached)
Colour	Black
Material	Aluminium

Environmental

Environment	Indoor, Outdoor

Compatible products

Category	Reference	Description
Camera	TVGP-M01-0201-TUR-B	TruVision 2MP, H.265+, Smart IP Turret Camera, 30 m IR, 2.8 mm lens, black
Camera	TVGP-M01-0401-TUR-B	TruVision 4MP, H.265+, Smart IP Turret Camera, 30 m IR, 2.8 mm lens, black

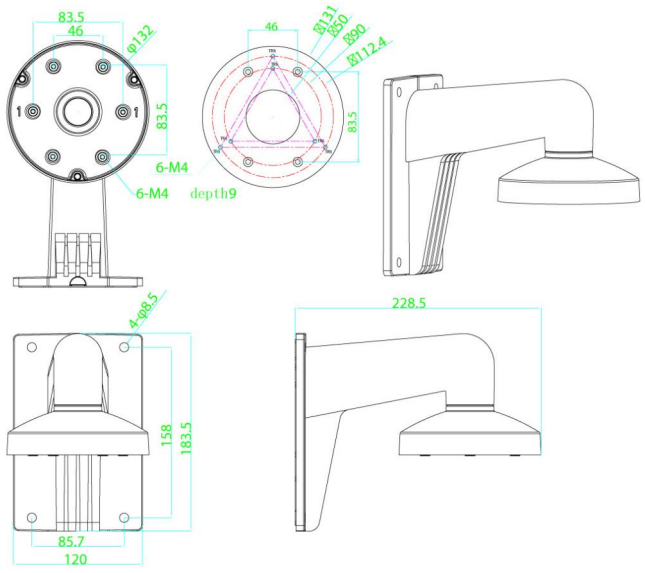

As a company of innovation, Kidde Global Solutions reserves the right to change product specifications without notice. For the latest product specifications, visit firesecurityproducts.com online or contact your sales representative.

Last updated on 28 August 2026 - 10:34